Tripcon™

Tripcon Engineering Pvt. Ltd.

CONVEYOR CHAINS & SPROCKETS
For Varied Industrial Applications

Engineering Excellence

Tripcon Engineering Pvt. Ltd.

Vision

Our aspiration is "collaborative growth". we are proud to say that we being a part in the collaborative growth of our nation for more than two decades , our journey toward collaborative success has begun & we have long way to go. We see Tripcon Engineering Pvt. Ltd. as one of the greatest company representing India globally. we will be setting example of core engineering, fine technicality, and modern mechanism and global recognitions

Mission

We would like to serve our clients with Quality Conveyor Chains & Sprockets at a very competitive price and fastest delivery. Our prospective is to be the contributor not just the consumer- all should be benefitted and grow together our customer, our supplier and we ourselves. We have socioeconomic objective & business approach for the nation.

Technology

We are focussed heavily on latest machines and cutting edge technology and has installed state of the art manufacturing equipments. The main raw materials required for manufacturing the chains & sprockets are flat bars, plates and round bars of the best grades of steel procured from reputed manufacturers all over the globe, which have to pass through rigorous quality checks.

The manufacturing process involved in the conveyor chains are for the flat components and the round components.

For the flat components that is links the processes are blanking, punching, deburing & straightening. This is followed by the process of shearing and welding of varieties of attachments. And the processes for the round components involves cutting and machining on CNC SPMs.

Tripcon firmly believes that the back

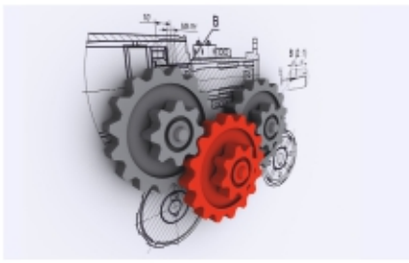

bone of a Conveyor Chain is the heat treatment given to it. Hence, heat treatment is given to all the products in the ultra modern furnaces for through hardening & case carburising as required for the product using the quenching technology of tripcon.

Round components after hardening and tempering undergoes grinding process to reduce the friction between the mating components and parts of the equipments.

Assembling of the chain components forms a vital link in the whole process which is done on power presses and assembled to lengths as per the customer's requirement.

Final quality & pre-loading process requires the assembled chain to be subjected once again to every type of quality check.

Tripcon manufactures conveyer chains & sprockets of the finest quality and is capable of producing up to 10000 meters of special application chains every month.

An ISO 9001-2008 Certified Company

Our team

Great experience and dedication of our team has always evolved our product with better quality. We do conduct training programs on regular intervals for our team to enhance the productivity and to maintain higher quality standards. Our team consists of efficient & smart people; they themselves have the ability to deal with adverse conditions and they also know the importance of team work which itself forms our greatest asset.

Global Network

Apart from covering the domestic market we are also contributing in strengthening our nation by earning foreign currency by exporting our products over the globe. Currently we are exporting our products to countries like - Nepal, Myanmar, Germany, Turkey, Indonesia, Uganda, Syria, Kenya, Bahrain and many more to join the galaxy of our clients.

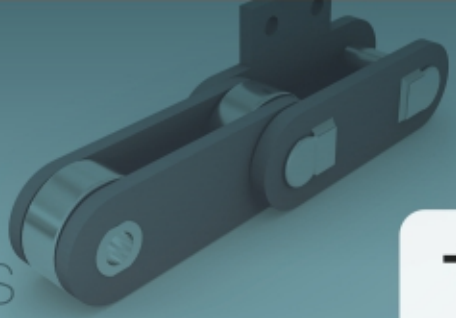

Cement Plant Chains

Reclaimer Chains

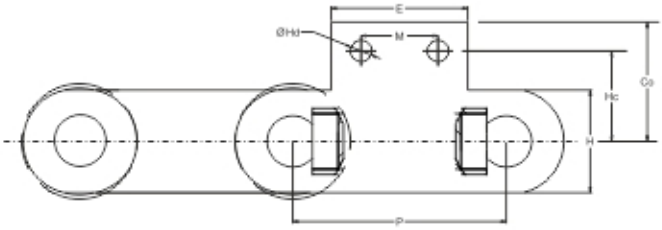

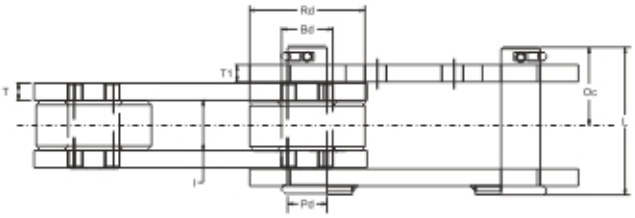

Technical Specifications

CHAIN NO.	PITCH P	Width Between inner plate I	Roller Dia Rd	Inner link plate size		Outer link plate size		Lug Plate T1	Pin Dia Pd	Pin Length L	Dist Oc	Length E	Pitch M	Hole Dia Hd	Dist Hc	Dist Co	Min. Tensile Strength M.T
				H	T	H	T										
TR25040	250	54	85	70	10	70	10	12	26	115	60.5	190	90	22	80	110	40
TR25020	250	35	85	60	8	60	8	12	28	88	42	200	130	21	95	120	20
TR31550	315	37	120	90	12	90	12	14	36	128	52	200	130	25	120	150	50
TR25040	250	37	64	57	10	57	10	12	21	95	40	160	90	21	90	130	40
TR25070	250	56	115	100	20	100	20	22	30	163	72	220	160	25	120	150	70
TR250100	250	95	115	100	20	100	20	22	40	174	70	280	210	25	88	120	100
TR25040	250	54	85	70	10	70	10	10	26	112	50	190	140	21	85	110	40
TR31575	315	60	115	100	12	100	12	12	36	130	65	250	200	21	105	130	75
TR25040	250	37	64	57	10	57	10	12	21	93	60	160	90	21	80	120	40
TR250110	250	57	105	90	18	90	18	20	36	168	67	160	90	26	80	120	110
TR25060	250	54	85	75	10	75	10	12	28	115	52	160	90	21	95	135	60
TR25040	250	41	75	65	12	65	12	12	28	113	65	160	100	21	65	100	40
TR25075	250	56	95	77	14	77	14	14	30	138	77	180	100	23	77	117	75
TR25040	250	37	64	57	10	50	10	12	21	95	40	160	90	21	130	90	40
TR25080	250	54	95	80	14	80	14	16	30	139	59	160	90	21	100	140	80
TR25045	250	50	90	70	12	70	12	25	30	136	65	200	120	35	120	160	45
TR31550	315	50	80	70	16	70	16	18	32	140	62	160	90	23	118	80	50
TR31563	315	60	120	80	16	80	16	18	36	160	65	200	130	25	120	155	63
TR250100	250	56	112	100	20	100	20	22	40	167	72	225	158	26	120	150	100
TR250100	250	70	110	85	15	85	15	18	36	163	60	160	90	22	100	140	100

An ISO 9001-2008 Certified Company

ALL DIMENSIONS ARE IN MM.

Cement Plant Chains

Reclaimer Chains

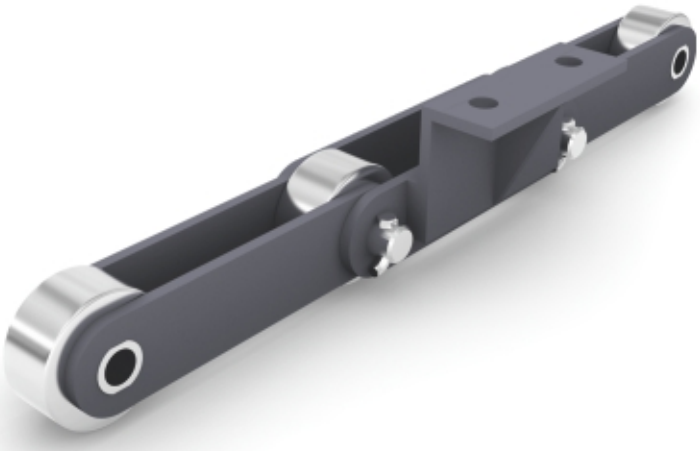

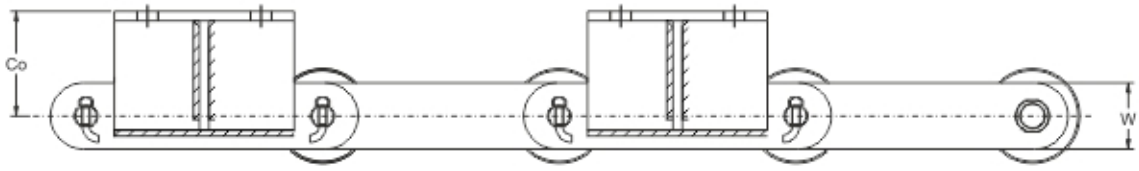

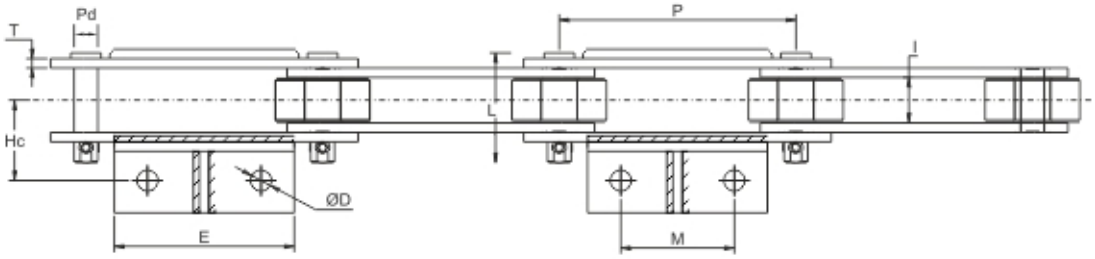

Technical Specifications

CHAIN NO.	PITCH P	Width Between inner plate I	Inner link plate size		Outer link plate size		Pin Ø Pd	Pin Length L	Roller Ø Rd	Attachment Length E	Hole Pitch M	Hole Ø D	Dist HC	Dist Co	Min. Tensile Strength M.T
			W	T	W	T									
TR31590	315	70	100	15	100	15	36	160	115	190	130	25	117	140	90
TR25060	250	54	75	14	75	14	33	136	90	150	100	25	110	157	60
TR315100	315	70	100	15	100	15	36	162	115	190	130	25	118	140	100
TR31550	315	50	80	12	80	12	36	132	95	19	130	21	90	140	50
TR25020	250	30	45	8	45	8	18	80	60	160	100	21	80	130	20
TR315100	315	70	100	15	100	15	36	162	115	190	130	25	117	140	100
TR25040	250	48	75	10	75	10	25	114	90	140	90	22	90	110	40

ALL DIMENSIONS ARE IN MM.

Deep Link Chains

Deep Link Chains

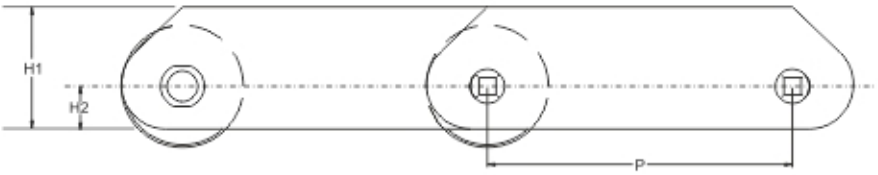

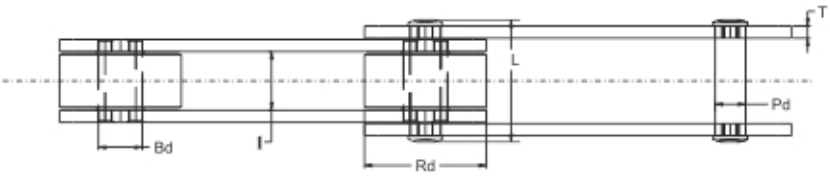

Technical Specifications

CHAIN NO.	Ultimate Strength Kgf M.T	PITCH P mm							I	Pin Ø Pd	Bush Ø Bd	Roller Ø Rd	H1	H2	T	L	L1 max. of Connection Pin
TDE 56	5.0	63	80	100	125	160	200	250	24	10	15	42	45	30	4	47	54
TDE 80	8.0	80	100	125	160	200	250	315	28	12	18	50	50	32.5	5	57	65
TDE 112	11.0	80	100	125	160	200	250	315	32	15	21	60	60	40	6	65	74
TDE 160	16.0	100	125	160	200	250	315	400	37	18	25	70	70	45	7	75	86
TDE 224	22.0	125	160	200	250	315	400	500	43	21	30	85	90	60	8	88	100
TDE 315	31.0	160	200	250	315	400	500	630	48	25	36	100	100	65	10	100	114
TDE 450	45.0	200	250	315	400	500	630	800	56	30	42	120	120	80	12	116	136
TDE 630	62.0	250	315	400	500	630	800	1000	66	36	50	140	140	90	14	140	156
TDE 900	90.0	250	315	400	500	630	800	1000	78	44	60	170	180	120	16	164	185

ALL DIMENSIONS ARE IN MM.

Welded Steel Chains

Welded Steel Chains

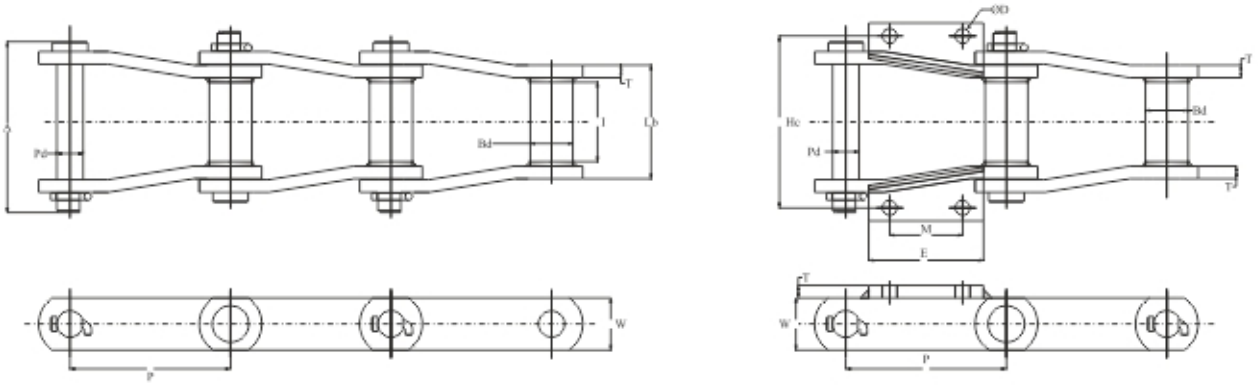

Technical Specifications

CHAIN NO.	Average Pitch P	Max. Pin Length A	I	Side Bars Thickness T	Side Bars Height W	Pins Pd	Bush Lb	Bush Bd	Min. Untimate Strength MT
TW80	80	84	32	6	34	14.2	57	31	13
TW1016	101.6	106	41.5	10	40	19	72	36.5	27
TW152	152.4	106	41.4	10	40	19	72	36.5	27
TW154	154	161	76	12	50	25.4	110	41.3	38

NOTE: Dimensions are subject to change.
Other sizes available upon request.
Minimum order quantities may be required on some parts.

ALL DIMENSIONS ARE IN MM.

HOLLOW PIN CHAINS

HOLLOW PIN CHAINS

Tripcon

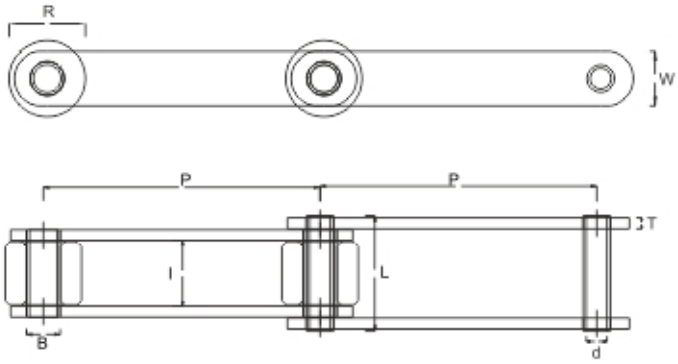

Technical Specifications

CHAIN NO.	PITCH P	PIN BORE		ROLLER		LINK		BREAKING LOAD KGS	
		d ø	L APP.	R ø	I	W	T	SOFT LINK	HARDENED LINK
020	50.80	9.7	38.50	31.75	15.20	26.0	4.0	2200	4000
025	63.50	9.7	38.50	31.75	15.20	26.0	4.0	2200	4000
030	76.20	9.7	38.50	31.75	15.20	26.0	4.0	2200	4000
040	101.60	9.7	38.50	31.75	15.20	26.0	4.0	2200	4000
050	127.00	9.7	38.50	31.75	15.20	26.0	4.0	2200	4000
060	152.40	9.7	38.50	31.75	15.20	26.0	4.0	2200	4000
031	76.20	15.0	52.0	47.62	19.05	40.0	5.0	5000	12000
040	101.60	15.0	52.0	47.62	19.05	40.0	5.0	5000	12000
051	127.00	15.0	52.0	47.62	19.05	40.0	5.0	5000	12000
061	152.40	15.0	52.0	47.62	19.05	40.0	5.0	5000	12000
082	203.20	15.0	52.0	47.62	19.05	40.0	5.0	5000	12000
042	101.60	19.0	61.0	66.67	25.40	50.0	6.0	10000	20000
052	127.00	19.0	61.0	66.67	25.40	50.0	6.0	10000	20000
062	152.40	19.0	61.0	66.67	25.40	50.0	6.0	10000	20000
010	254.00	19.0	61.0	66.67	25.40	50.0	6.0	10000	20000
0375	95.25	10.30	38.50	31.75	16.00	25.0	4.0	2200	4000
044	101.60	15.00	42.0	38.0	14.50	40.0	5.0	5000	12000
125	125.00	13.25	48.0	47.62	19.50	40.0	5.0	5000	12000

ALL DIMENSIONS ARE IN MM.

TÜV NORD

An ISO 9001-2008 Certified Company

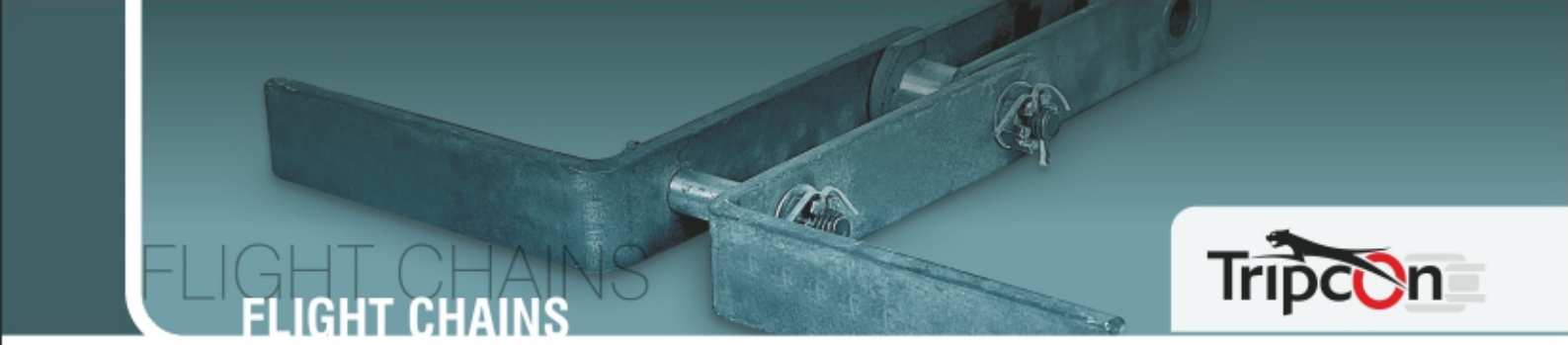

FLIGHT CHAINS

FLIGHT CHAINS

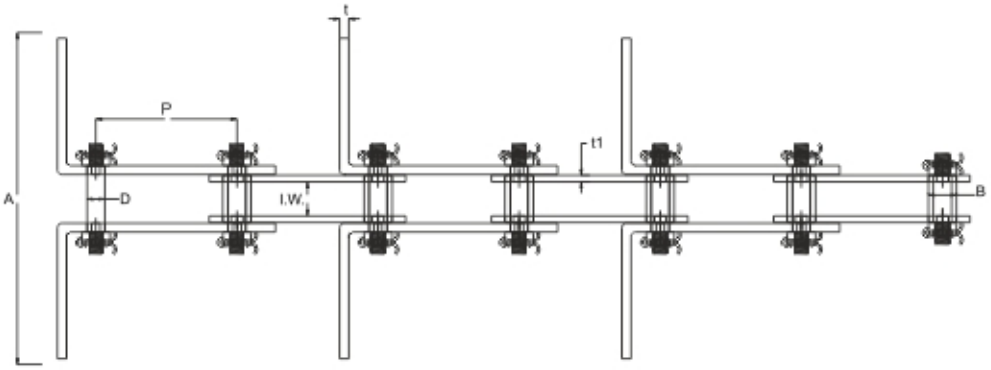

Technical Specifications

CHAIN NO.	PITCH P	I.W.	LINK			BUSH B Ø	PIN D Ø	FLIGHT WIDTH A
			W (width)	t (outer)	t1 (inner)			
TRE-FL-100	125	30	40	8	6	25	15.75	220
TRE-FL-101	125	30	40	8	6	25	15.75	250
TRE-FL-102	125	30	40	8	6	25	15.75	285
TRE-FL-103	125	30	40	8	6	25	15.75	385
TRE-FL-104	125	32	40	8	6	25	15.75	485
TRE-FL-105	125	32	50	8	6	31.75	19.05	285
TRE-FL-106	125	32	50	8	6	31.75	19.05	385
TRE-FL-107	125	32	50	8	6	31.75	19.05	485
TRE-FL-108	125	32	50	8	6	31.75	19.05	585
TRE-FL-109	125	32	60	8	6	31.75	19.05	385
TRE-FL-110	125	32	60	8	6	31.75	19.05	485
TRE-FL-111	125	32	60	8	6	31.75	19.05	585

FLOW CONVEYOR CHAINS

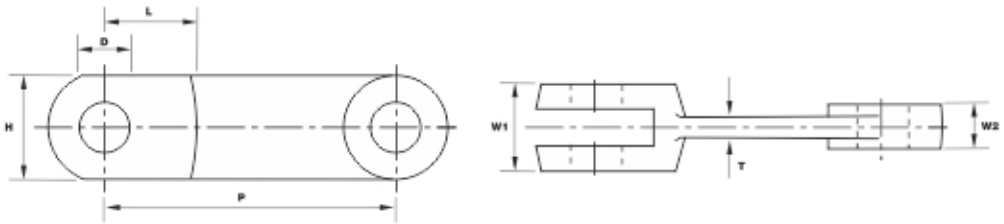

Technical Specifications

CHAIN NO.	PITCH P	BREAKING LOAD KG.	LINK H	W1	W2	T	L	HOLE DIA D
TR-835	102	15000	15	28	12	8	32	14
TR-836	142	30000	30	42	20	11	46	25
TR-837	142	45000	45	62	30	16	55	25
TR-838	142	60000	60	62	30	16	55	25

ALL DIMENSIONS ARE IN MM.

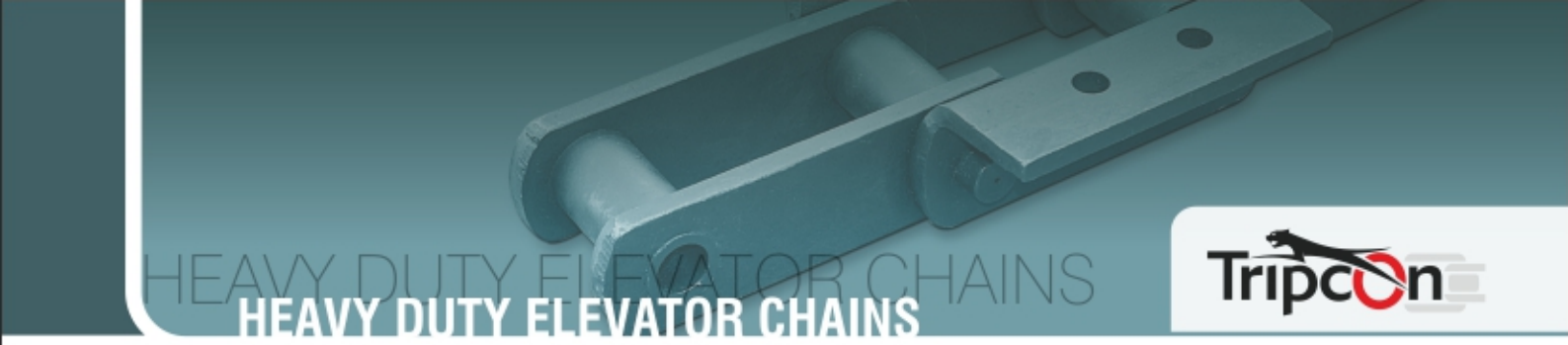

HEAVY DUTY ELEVATOR CHAINS

HEAVY DUTY ELEVATOR CHAINS

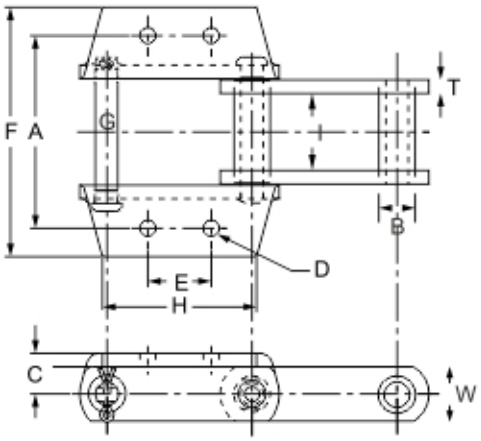

For Cement Industry

- These Chains are available in different styles of attachments such as K2, K24, K3, K44, K443 Etc.
- The Details of Above Attachments can be Obtained on Request.

Technical Specifications

CHAIN NO.	PITCH	BREAKING LOAD KG.	INNER WIDTH I	LINK		BUSH D	PIN G
				W	T		
TC - 110	152.4	16000	54.00	40.0	10.00	31.75	16.00
TC - 844	152.4	17000	63.50	50.0	12.70	30.00	19.00
TC - 856	152.4	37000	76.20	65.0	12.00	44.45	25.40
TC - 956	152.4	44000	75.00	75.0	12.00	44.45	25.40
TC - 857	152.4	44000	76.20	83.0	12.00	44.45	25.40
TC - 958	152.4	44000	76.20	83.0	14.00	55.80	28.70
TC - 859	152.4	70000	95.25	102.0	16.00	60.45	31.75
TC - 984	177.8	70000	95.25	102.0	16.00	63.50	35.00
TC - 4871	228.6	41000	85.85	75.0	12.00	44.45	25.40

ALL DIMENSIONS ARE IN MM.

SPECIAL PURPOSE CONVEYOR CHAINS

SPECIAL PURPOSE CONVEYOR CHAINS

FLANGE ROLLER CHAIN

CHAIN WITH 'L' TYPE ATTACMENT

EXTENDED PITCH ROLLER CHAIN

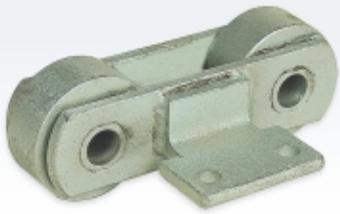

SLAT CONVEYOR CHAIN

CHAIN FOR REFINERIES

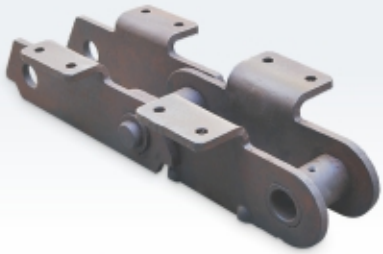

CHAIN FOR CEMENT INDUSTRY

CHAIN WITH RIVETTED ATTACHMENT

SCREEN CHAIN

BUSHED ROLLER CHAINS

Slat Conveyor & Elevator Chains

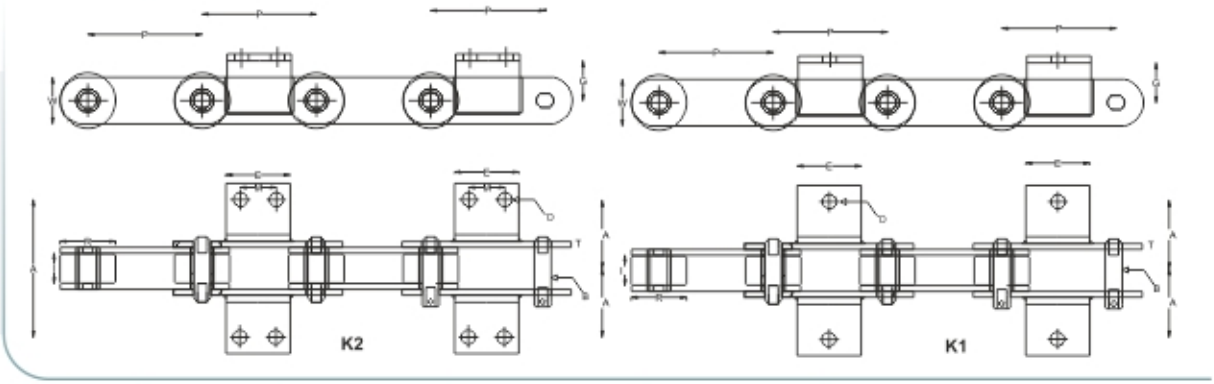

CHAIN NO.	PITCH P	BREAKING LOAD KGS	PIN		ROLLER		LINK		ATTACHMENT				
			B ø	L APP.	R ø	I	W	T	A	D ø	E	G	M
TR 040	40.00	7000	10.05	46.0	30.00	18.0	25.0	4.5	28.0	7.0	P-20	18.5	--
TR 041	41.30	5000	8.25	38.0	15.55	21.0	25.0	3.1	35.0	8.3	P-22	16.0	--
TR 050	50.00	5000	9.50	40.0	30.00	15.0	25.0	3.0	30.0	9.5	25.0	18.0	--
TR 021	50.80	5000	10.05	42.0	31.75	15.0	25.0	4.0	40.0	10.5	30.0	18.0	--
TR 058	58.34	8000	10.05	48.0	19.05	22.4	28.0	6.0	36.5	11.5	P-27	17.0	--
TR 063	63.00	3500	8.00	40.0	30.00	16.0	20.0	3.0	40.0	11.2	45.0	13.0	--
TR 025	63.50	7500	14.50	70.0	25.40	23.0	30.0	5.0	40.0	11.2	45.0	18.0	--
TR 066	66.26	8000	11.05	64.0	22.20	28.5	30.0	5.0	50.0	8.5	55.0	26.0	--
TR 031	76.20	11000	14.50	66.0	50.00	35.0	40.0	5.0	35.0	6.5	35.0	21.0	--
TR 032	76.20	12000	15.70	70.0	50.00	30.0	35.0	6.0	35.0	10.0	35.0	17.0	--
TR 033	76.20	8000	10.05	55.0	38.00	20.0	30.0	5.0	38.0	11.2	38.0	24.0	--
TR 080	80.00	18000	15.70	84.0	60.00	42.0	50.0	7.0	50.0	17.5	50.0	35.0	--
TR 0100	100.00	8000	11.05	66.0	55.00	25.0	40.0	5.0	50.0	11.2	62.0	28.0	36.0
TR 042	101.60	8000	10.05	65.0	47.62	30.0	30.0	5.0	65.0	12.7	72.0	28.5	38.0
TR 044	101.60	10000	15.70	57.0	50.00	20.0	40.0	5.0	35.0	10.5	63.0	20.0	--
TR 045	101.60	12000	15.75	72.0	50.80	35.0	40.0	5.0	75.0	11.2	55.0	30.0	32.0
TR 046	101.60	15000	14.50	55.0	38.00	20.0	45.0	6.0	35.0	10.5	65.0	21.0	--
TR 0120	120.00	8000	10.05	55.0	38.00	20.0	30.0	5.0	40.0	11.2	62.0	26.0	36.0
TR 0125	125.00	8000	10.05	55.0	38.00	20.0	30.0	5.0	40.0	11.2	62.0	26.0	36.0
TR 0126	125.00	25000	19.70	96.0	80.00	45.0	65.0	8.0	65.0	17.5	60.0	40.0	--
TR 0127	125.00	12000	14.50	75.0	30.00	30.0	40.0	5.0	50.0	9.5	60.0	40.0	--
TR 150	150.00	20000	19.70	102.0	60.00	50.0	50.0	7.8	70.0	11.2	30.0	45.0	--
TR 061	152.40	8000	12.70	60.0	40.00	26.0	30.0	5.0	45.0	11.2	100.0	15.0	60.0
TR 062	152.40	11000	10.05	52.0	38.00	20.0	30.0	6.0	62.5	12.0	80.0	40.0	45.0
TR 064	152.40	15000	15.75	75.0	47.62	32.0	45.0	6.0	45.0	14.5	56.0	25.0	--
TR 065	152.40	20000	19.70	80.0	68.00	32.0	50.0	7.8	55.0	14.0	90.0	40.0	50.0
TR 067	152.40	20000	19.70	95.0	50.00	46.0	50.0	7.8	70.5	14.0	60.0	32.0	--
TR 068	152.40	25000	22.00	95.0	76.20	35.0	50.0	10.0	65.0	17.5	90.0	45.0	65.0
TR 069	152.40	40000	25.00	90.0	80.00	40.0	70.0	12.0	50.0	17.5	120.0	55.0	80.0
TR 0160	160.00	50000	23.00	135.0	90.00	55.0	75.0	10.0	75.0	14.5	120.0	70.0	85.0
TR 0200	200.00	27000	19.75	111.0	80.00	52.0	50.0	10.0	70.0	17.5	130.0	55.0	90.0
TR 0203	203.20	25000	22.00	110.0	88.00	44.0	70.0	10.0	65.0	17.5	125.0	56.0	83.0
TR 091	228.60	18000	19.00	100.0	88.00	52.0	50.0	7.0	73.0	13.5	140.0	63.0	90.0
TR 0251	250.00	20000	20.00	90.0	67.00	30.0	50.0	8.0	75.0	14.5	110.0	50.0	80.0
TR 0252	250.00	40000	29.95	122.0	90.00	54.0	70.0	10.0	50.0	21.5	180.0	120.0	130.0
TR 0253	250.00	50000	26.00	125.0	75.00	40.0	65.0	14.0	100.0	21.5	160.0	45.0	85.0
TR 0254	250.00	70000	34.00	143.0	85.00	53.0	70.0	16.0	80.0	21.0	175.0	50.0	90.0
TR 0255	250.00	45000	25.00	106.0	100.00	48.0	70.0	10.0	85.0	21.0	150.0	120.0	120.0
TR 011	254.00	18000	19.75	100.0	70.00	45.0	50.0	8.0	65.0	13.5	120.0	30.0	70.0
TR 012	254.00	10000	15.70	81.0	58.00	45.0	40.0	5.0	75.0	14.0	120.0	42.0	35.0
TR 013	304.80	30000	22.00	120.0	76.00	57.0	65.0	10.0	73.0	13.5	203.0	63.5	152.0
TR 0400	400.00	40000	29.00	120.0	90.00	50.0	70.0	12.0	8.0	17.5	260.0	35.0	160.0
TR 0600	600.00	25000	32.00	100.0	96.00	39.5	70.0	10.0	--	--	--	--	--

ALL DIMENSIONS ARE IN MM. **ATTACHMENT :** WELDED, RIVETTED, INTEGRAL TYPE WITH A1, A2, K1, K2, M1, G20, F TYPE ETC.
ROLLER : PLAIN / FLANGED TYPE **PIN :** CONSTRUCTION RIVETTED / COTTERED TYPES

BUSHED CHAINS

BUSHED CHAINS

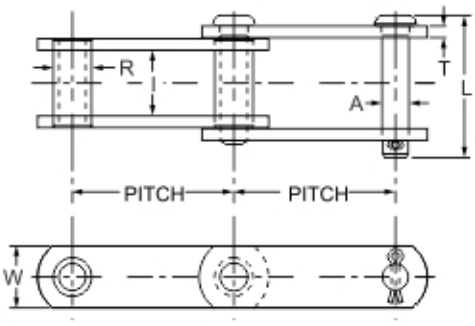

Straight Link

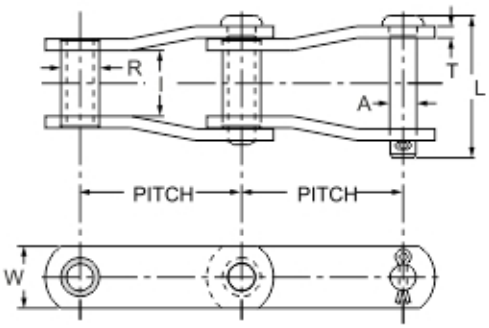

Crank Link

Technical Specifications

CHAIN NO.	PITCH P	BREAKING LOAD KGS	PIN		BUSH		LINK	
			A Ø	L APP.	R Ø	I	W	T
TB 026	66.26	11000	12.70	62.0	21.43	27.50	30.0	5.0
TB 080	80.00	30000	19.70	105.0	40.00	40.00	60.0	10.0
TB 040	101.60	10000	15.70	90.0	23.80	54.00	40.0	5.0
TB 041	101.60	10000	15.70	70.0	23.80	32.00	40.0	5.0
TB 042	101.60	12000	15.70	77.0	35.00	35.00	50.0	6.0
TB 043	101.60	18000	15.70	112.0	25.00	54.00	40.0	10.0
TB 0125	125.00	12000	14.70	85.0	25.00	29.00	40.0	10.0
TB 0126	125.00	30000	20.00	98.0	30.00	44.00	65.0	8.0
TB 060	152.60	18000	15.70	115.0	32.00	54.00	40.0	10.0
TB 061	152.60	25000	17.90	102.0	32.00	50.00	50.0	8.0
TB 062	160.00	8000	14.10	64.0	20.00	25.00	40.0	5.0
TB 090	228.60	28000	19.90	106.0	32.00	50.00	65.0	10.0
TB 091	228.60	30000	25.40	150.0	63.50	63.50	65.0	12.7
TB 092	228.60	40000	25.40	150.0	44.45	63.50	70.0	14.0
TB 093	228.60	100000	38.10	165.0	60.30	76.20	90.0	16.0
TB 012	304.80	28000	19.80	96.0	35.00	45.0	65.0	8.0

- Bushed Chains are used for Varied Applications

ALL DIMENSIONS ARE IN MM.

PAVER CHAINS

PAVER CHAINS

For Asphalt Application

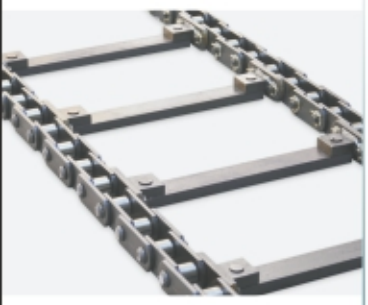

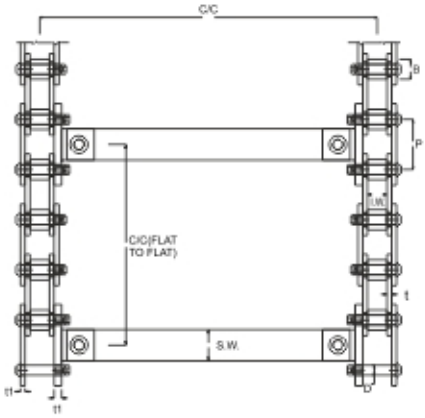

For WetMix Application

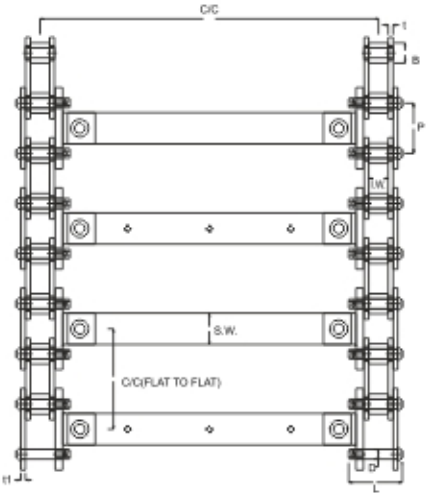

Technical Specifications

CHAIN NO.	PITCH P	I.W.	LINK			BUSH/ ROLLER ØB	PIN ØD	C/C	C/C (flat to flat)	
			W (width)	t (inner)	t1 (outer)				Asphalt	WetMix
TRE-PAV-01	80	31	50	7.5	7.5	32	15.7	540	320	160
TRE-PAV-02	80	31	50	7.5	7.5	32	15.7	480	320	160
TRE-PAV-03	80	31	50	7.5	7.5	32	15.7	500	320	160
TRE-PAV-04	80	34	46	7.5	6	28	15.7	560	480	160
TRE-PAV-05	80	34	46	7.5	6	28	15.7	510	480	160
TRE-PAV-06	70	34	40	5	6	30	15	540	560	140
TRE-PAV-07	80	35.5	40	8	6	36	18	505	320	160
TRE-PAV-08	84	26	40	8	8	24	15.7	470	336	168
TRE-PAV-09	80	26	32	5	5	20	14	480	320	160

- We also design these chains with suitable selection of special steel grades to increase the wear resistivity of chains for longer life.
- Chains are also Available as per Client Specifications.

ALL DIMENSIONS ARE IN MM.

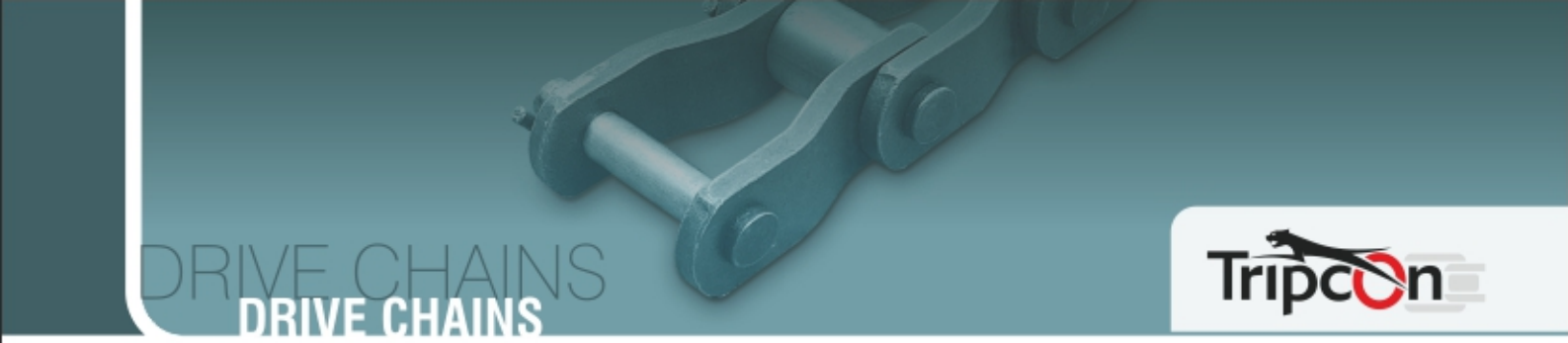

DRIVE CHAINS

DRIVE CHAINS

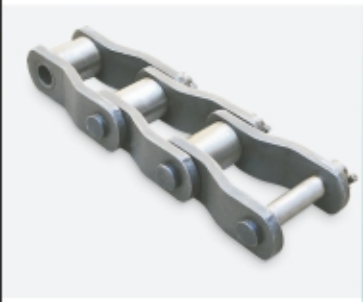

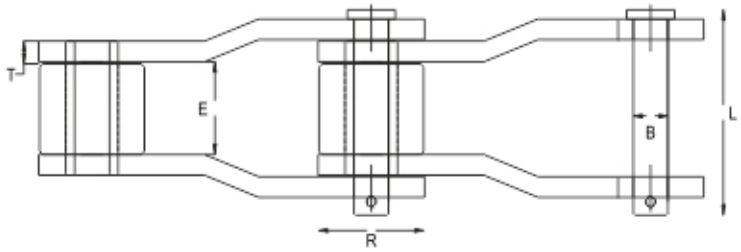

Technical Specifications

CHAIN NO.	PITCH P	BREAKING LOAD KGS	PIN		ROLLER		LINK	
			B	L APP.	R	E	W	T
TD-025	63.50	35000	19.75	75.0	39.68	38.10	60.0	8.00
TD-2609	66.26	13000	11.10	69.0	22.22	28.00	32.0	6.50
TD-1568	77.90	49000	19.00	98.0	41.25	40.00	50.0	10.00
TD-402	78.11	21000	15.85	88.0	31.75	38.10	40.0	8.00
TD-1037	78.11	35000	15.85	95.0	31.75	38.10	45.0	10.00
TD-3090	78.486	62000	22.20	115.0	44.45	38.10	60.0	12.70
TD-1245	102.45	77000	23.80	132.0	45.21	50.00	60.0	14.00
TD-635	114.30	94000	27.90	136.0	57.15	52.50	76.0	14.00

ELEVATOR CHAINS

ELEVATOR CHAINS

For Asphalt Industry

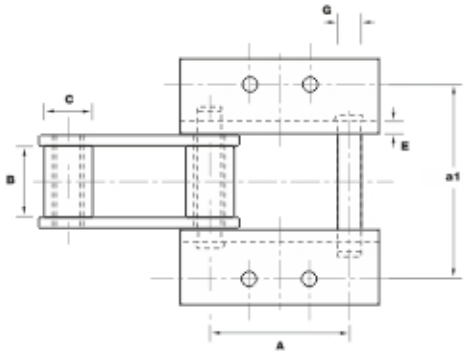

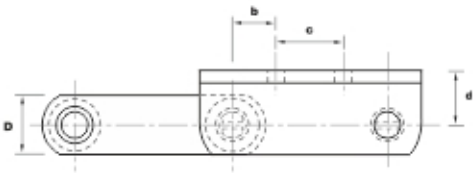

Technical Specifications

CHAIN NO.	PITCH A	BREAKING LOAD KG.	INSIDE WIDTH B	PIN DIA. G	ROLLER DIA. C	LINK		a1	C	d
						D	E			
TAE-102B	101.6	25000	56.36	15.8	25.4	40	10	120.65	44.45	25.4
TAE-3945	101.6	20000	50.8	15.8	31.75	40	8	120.65	44.45	34.93
TAE-3952	101.6	28000	50.8	19.05	36.52	45	10	120.65	44.45	41.28
TAE-3953	101.6	20000	38.1	15.8	34.93	40	8	120.65	63.50	34.93
TAE-4604	116.94	20000	50.8	15.8	34.93	40	8	120.65	44.45	34.93
TAE-3940	152.4	40000	50.8	19.05	41.3	60	10	120.65	58.74	50.8
TAE-2856	152.4	63000	76.2	25.4	69.85	65	12.7	120.65	63.50	47.63

ALL DIMENSIONS ARE IN MM.

Bagasse Carrier Chains

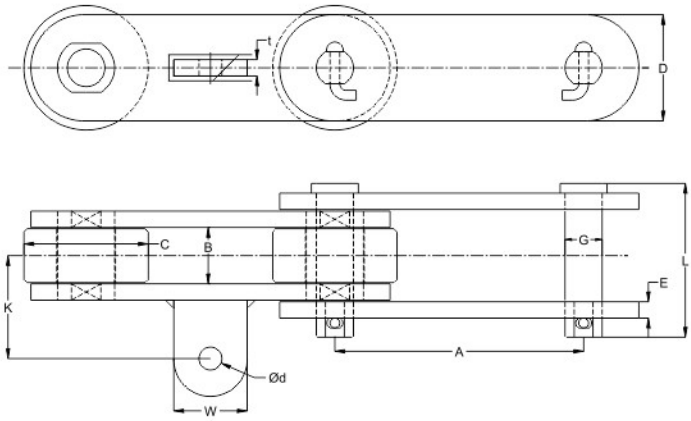

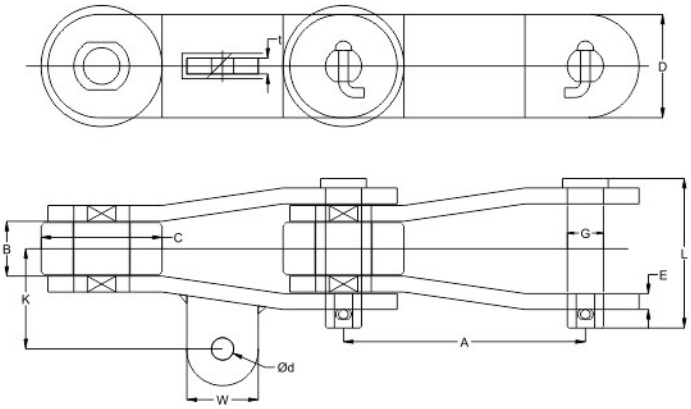

Technical Specifications

CHAIN NO.	PITCH A	BREAKING LOAD M.T.	INSIDE WIDTH B	PIN DIA. G	ROLLER DIA. C	LINK		K	W	t	ØD	L
						D	E					
TRE/BS/C/14	152.4	14 M.T.	30	Ø 19	Ø 49.5	40	8	73	40	12	Ø12.5	80
TRE/BS/C/22	152.4	22 M.T.	36	Ø 19	Ø 53.5	40	10	55	40	16	Ø 20	95
TRE/BS/C/28	152.4	28 M.T.	36	Ø 20	Ø 63.5	50	10	58	50	16	Ø 20	95
TRE/BS/C/40	152.4	40 M.T.	36	Ø 23	Ø 76.2	60	10	71.2	50	10	Ø 19	95
TRE/BS/C/52	152.4	52 M.T.	36	Ø 23	Ø 80	65	12	60	65	16	Ø 23	100
TRE/BS/C/57	152.4	57 M.T.	36	Ø 28	Ø 88	75	12	65	50	16	Ø 20	100
TRE/BS/C/60	200	60 M.T.	36	Ø 30	Ø 90	75	14	96	65	16	Ø 23	108

ALL DIMENSIONS ARE IN MM.

Sugar Industry Chains

Cane Carrier Chains

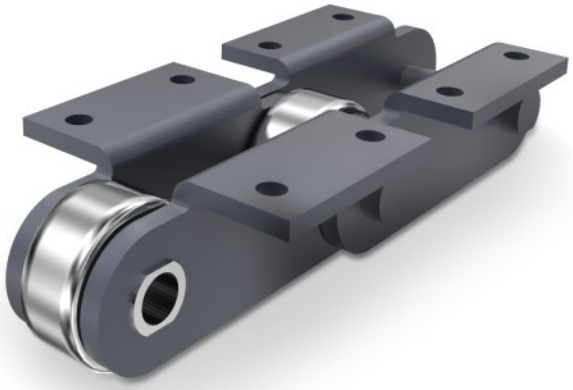

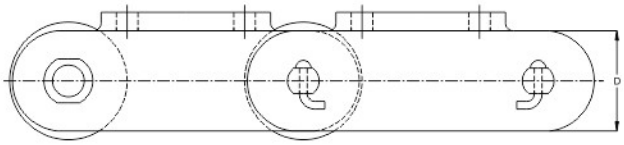

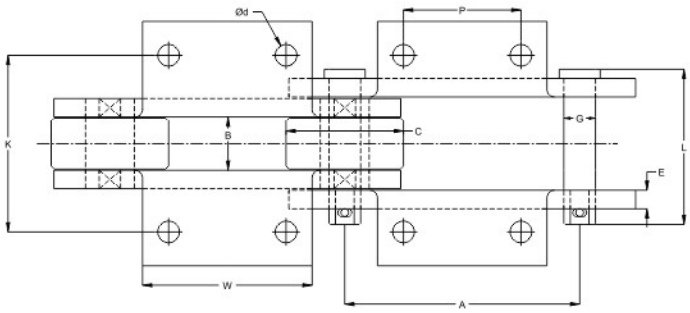

Technical Specifications

CHAIN NO.	PITCH A	BREAKING LOAD M.T.	INSIDE WIDTH B	PIN DIA. G	ROLLER DIA. C	LINK		K	W	t	ØD	L
						D	E					
TRE/CA/C/35	152.4	35 M.T.	37	Ø 24	Ø 76.2	60	10	110	110	75	Ø 15	95
TRE/CA/C/45	152.4	45 M.T.	38	Ø 22	Ø 76.2	65	10	110	120	72	Ø 16	95
TRE/CA/C/50	152.4	50 M.T.	38	Ø 24	Ø 76.2	65	12	118	110	76.2	Ø 14	102
TRE/CA/C/51	152.4	51 M.T.	37	Ø 27	Ø 82	68	12	150	110	75	Ø 15	100
TRE/CA/C/55	152.4	55 M.T.	37	Ø 25	Ø 90	75	12	112	120	78	Ø 15	100
TRE/CA/C/68	200	68 M.T.	37	Ø 32	Ø 90	75	16	158	120	76	Ø 16	116

ALL DIMENSIONS ARE IN MM.

Applications

- Sugar Industry
- Cement Plants
- Steel Plants
- Chemical Plants
- Automobile Industry
- Timber Industry
- Fertilizer Plants
- Road Construction Equipments

Tripcon™

Tripcon Engineering Pvt. Ltd.

Plot No.: 1115, Phase - IV, G.I.D.C.
Vithal Udyognagar - 388 121
Dist.: Anand, Gujarat, INDIA

Phone : +91 2692 236031
Fax : +91 2692 236380

Email : tripkon_engg@yahoo.co.in
Web : www.elevatorchains.com

SHAPE 02692-231527